Cambridge International AS & A Level

Cambridge International Examinations
Cambridge International Advanced Subsidiary and Advanced Level

CANDIDATE NAME

CENTRE NUMBER

CANDIDATE NUMBER

8965608004

PHYSICS **9702/42**

Paper 4 A Level Structured Questions **February/March 2016**

2 hours

Candidates answer on the Question Paper.

No Additional Materials are required.

READ THESE INSTRUCTIONS FIRST

Write your Centre number, candidate number and name on all the work you hand in.
Write in dark blue or black pen.
You may use an HB pencil for any diagrams or graphs.
Do not use staples, paper clips, glue or correction fluid.
DO **NOT** WRITE IN ANY BARCODES.

Answer **all** questions.

Electronic calculators may be used.
You may lose marks if you do not show your working or if you do not use appropriate units.

At the end of the examination, fasten all your work securely together.
The number of marks is given in brackets [ ] at the end of each question or part question.

For Examiner's Use	
1	
2	
3	
4	
5	
6	
7	
8	
9	
10	
11	
12	
13	
Total	

This document consists of **24** printed pages.

© UCLES 2016

CAMBRIDGE International Examinations

Data

speed of light in free space	$c = 3.00 \times 10^{8}\,\text{m s}^{-1}$
permeability of free space	$\mu_0 = 4\pi \times 10^{-7}\,\text{H m}^{-1}$
permittivity of free space	$\varepsilon_0 = 8.85 \times 10^{-12}\,\text{F m}^{-1}$
	$(\frac{1}{4\pi\varepsilon_0} = 8.99 \times 10^{9}\,\text{m F}^{-1})$
elementary charge	$e = 1.60 \times 10^{-19}\,\text{C}$
the Planck constant	$h = 6.63 \times 10^{-34}\,\text{J s}$
unified atomic mass unit	$1\,\text{u} = 1.66 \times 10^{-27}\,\text{kg}$
rest mass of electron	$m_\text{e} = 9.11 \times 10^{-31}\,\text{kg}$
rest mass of proton	$m_\text{p} = 1.67 \times 10^{-27}\,\text{kg}$
molar gas constant	$R = 8.31\,\text{J K}^{-1}\,\text{mol}^{-1}$
the Avogadro constant	$N_\text{A} = 6.02 \times 10^{23}\,\text{mol}^{-1}$
the Boltzmann constant	$k = 1.38 \times 10^{-23}\,\text{J K}^{-1}$
gravitational constant	$G = 6.67 \times 10^{-11}\,\text{N m}^2\,\text{kg}^{-2}$
acceleration of free fall	$g = 9.81\,\text{m s}^{-2}$

© UCLES 2016

Formulae

uniformly accelerated motion	$s = ut + \frac{1}{2}at^2$ $v^2 = u^2 + 2as$
work done on/by a gas	$W = p\Delta V$
gravitational potential	$\phi = -\frac{Gm}{r}$
hydrostatic pressure	$p = \rho gh$
pressure of an ideal gas	$p = \frac{1}{3}\frac{Nm}{V}\langle c^2 \rangle$
simple harmonic motion	$a = -\omega^2 x$
velocity of particle in s.h.m.	$v = v_0 \cos \omega t$ $v = \pm \omega \sqrt{(x_0^2 - x^2)}$
Doppler effect	$f_o = \frac{f_s v}{v \pm v_s}$
electric potential	$V = \frac{Q}{4\pi\varepsilon_0 r}$
capacitors in series	$1/C = 1/C_1 + 1/C_2 + \ldots$
capacitors in parallel	$C = C_1 + C_2 + \ldots$
energy of charged capacitor	$W = \frac{1}{2}QV$
electric current	$I = Anvq$
resistors in series	$R = R_1 + R_2 + \ldots$
resistors in parallel	$1/R = 1/R_1 + 1/R_2 + \ldots$
Hall voltage	$V_H = \frac{BI}{ntq}$
alternating current/voltage	$x = x_0 \sin \omega t$
radioactive decay	$x = x_0 \exp(-\lambda t)$
decay constant	$\lambda = \frac{0.693}{t_{\frac{1}{2}}}$

© UCLES 2016

[Turn over

Answer **all** the questions in the spaces provided.

1 **(a)** State Newton's law of gravitation.

.....

.....

.....

.....[2]

(b) A satellite of mass m has a circular orbit of radius r about a planet of mass M. It may be assumed that the planet and the satellite are uniform spheres that are isolated in space.

Show that the linear speed v of the satellite is given by the expression

$$v = \sqrt{\frac{GM}{r}}$$

where G is the gravitational constant.
Explain your working.

[2]

(c) Two moons A and B have circular orbits about a planet, as illustrated in Fig. 1.1.

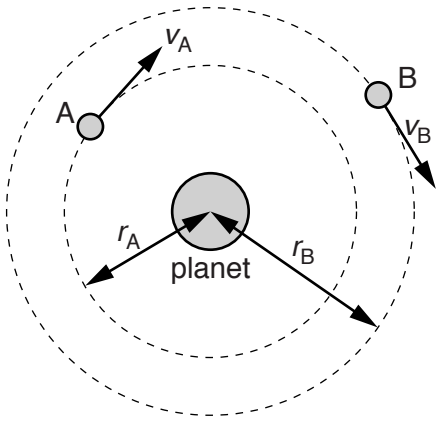

Fig. 1.1 (not to scale)

Moon A has an orbital radius r_A of 1.3×10^8 m, linear speed v_A and orbital period T_A.
Moon B has an orbital radius r_B of 2.2×10^{10} m, linear speed v_B and orbital period T_B.

© UCLES 2016

(i) Determine the ratio

1. $\frac{v_A}{v_B}$,

ratio = ...[2]

2. $\frac{T_A}{T_B}$.

ratio = ...[3]

(ii) The planet spins about its own axis with angular speed $1.7 \times 10^{-4}\,\text{rad}\,\text{s}^{-1}$.
Moon A is always above the same point on the planet's surface.

Determine the orbital period T_B of moon B.

T_B = ...s [2]

[Total: 11]

2 **(a)** State

(i) what is meant by *internal energy*,

.....

.....

.....[2]

(ii) the basic assumption of the kinetic theory of gases that leads to the conclusion that there is zero potential energy between the molecules of an ideal gas.

.....

.....[1]

(b) The pressure p and volume V of an ideal gas are related by

$$pV = \frac{1}{3} Nm\langle c^2 \rangle$$

where N is the number of molecules, m is the mass of a molecule and $\langle c^2 \rangle$ is the mean-square speed of the molecules.

Use this equation to show that the mean kinetic energy $\langle E_K \rangle$ of a molecule is given by

$$\langle E_K \rangle = \frac{3}{2} kT$$

where k is the Boltzmann constant and T is the thermodynamic temperature.

[3]

© UCLES 2016

(c) A cylinder contains 17 g of oxygen gas at a temperature of 12 °C. The mass of 1.0 mol of oxygen gas is 32 g. It may be assumed that the oxygen behaves as an ideal gas.

Calculate, for the oxygen gas in the cylinder,

(i) the mean kinetic energy of a molecule,

mean kinetic energy = ...J [2]

(ii) the number of molecules,

number = ...[2]

(iii) the total internal energy.

internal energy = ...J [1]

[Total: 11]

3 **(a)** Define *specific heat capacity*.

.....

.....

.....[2]

(b) A student carries out an experiment to determine the specific heat capacity of a liquid using the apparatus illustrated in Fig. 3.1.

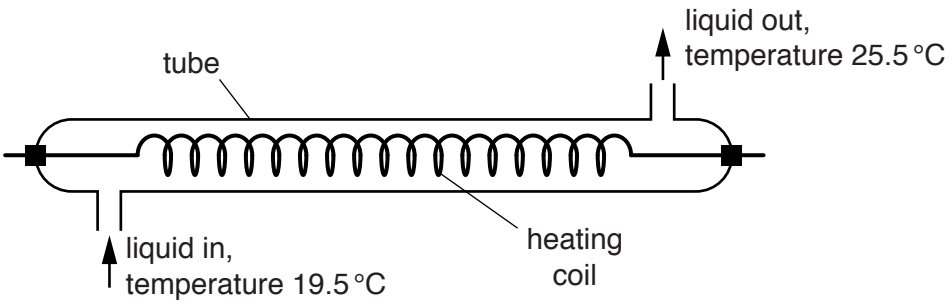

Fig. 3.1

Liquid enters the tube at a constant temperature of 19.5 °C and leaves the tube at a temperature of 25.5 °C. The mass of liquid flowing through the tube per unit time is m. Electrical power P is dissipated in the heating coil.

The student changes m and adjusts P until the final temperature of the liquid leaving the tube is 25.5 °C.

The data shown in Fig. 3.2 are obtained.

m/g s^{-1}	P/W
1.11	33.3
1.58	44.9

Fig. 3.2

(i) Suggest why the student obtains data for two values of m, rather than for one value.

.....

.....[1]

© UCLES 2016

(ii) Calculate the specific heat capacity of the liquid.

Show your working.

specific heat capacity = ... $J\,kg^{-1}\,K^{-1}$ [3]

(c) When the heating coil in **(b)** dissipates 33.3W of power, the potential difference V across the coil is given by the expression

$$V = 27.0 \sin(395t).$$

The potential difference is measured in volts and the time t is measured in seconds.

Determine the resistance of the coil.

resistance = ...Ω [3]

[Total: 9]

4 An object of mass 80 g oscillates with simple harmonic motion. The variation with time t of the displacement x of the object is shown in Fig. 4.1.

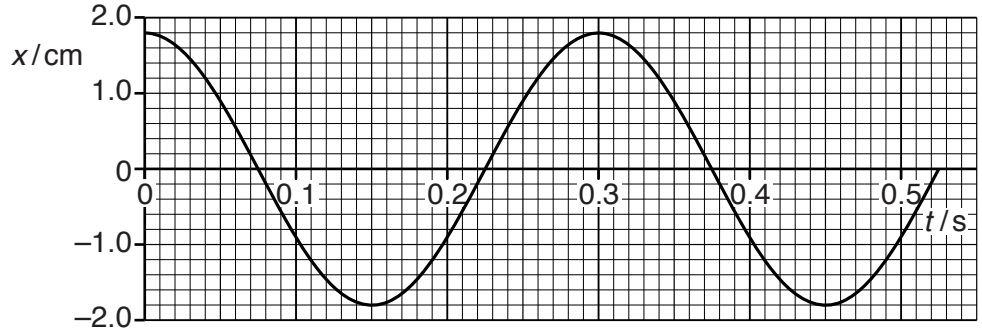

Fig. 4.1

(a) Use Fig. 4.1 to determine the amplitude and the period of the oscillations.

amplitude = ...cm

period = ...s
[1]

(b) Use Fig. 4.1 and your answers in **(a)** to calculate the kinetic energy of the object at time $t = 0.19$ s.

kinetic energy = ...J [3]

[Total: 4]

© UCLES 2016

5 **(a)** A digital signal is produced by sampling an analogue signal and passing the samples through an analogue-to-digital converter (ADC).

(i) State what is meant by a *digital signal*.

.....

.....

.....[2]

(ii) State one change to the sampling or to the ADC that will improve the accuracy of reproduction of the original analogue signal.

.....

.....[1]

(b) The least significant bit of the four-bit digital number 1100 represents a signal voltage of 2.5 mV. Determine the signal voltage, in mV, represented by this digital number.

voltage = ... mV [1]

[Total: 4]

6 A parallel beam of ultrasound is incident normally on the surface of a layer of fat of thickness 1.1 cm, as shown in Fig. 6.1.

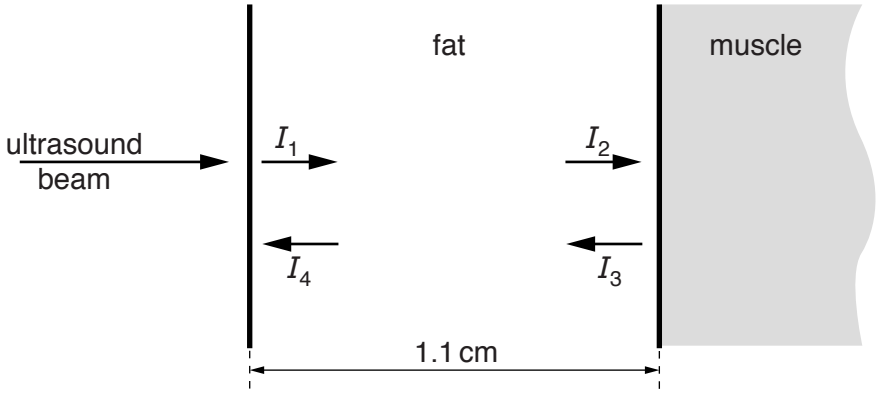

Fig. 6.1

For the ultrasound,
I_1 is the intensity just after entering the surface of the fat layer,
I_2 is the intensity incident on the fat-muscle boundary,
I_3 is the intensity reflected from the fat-muscle boundary,
I_4 is the intensity received back at the surface of the fat layer.

Some data for the fat are given in Fig. 6.2.

specific acoustic impedance Z	$1.4 \times 10^6\,\text{kg m}^{-2}\,\text{s}^{-1}$
density ρ	$940\,\text{kg m}^{-3}$
absorption (attenuation) coefficient μ	$48\,\text{m}^{-1}$

Fig. 6.2

(a) Calculate the time interval between a short pulse of ultrasound initially entering the layer of fat and then returning back to the surface of the fat layer.

time = ... s [3]

© UCLES 2016

(b) Calculate the ratio $\frac{I_2}{I_1}$.

ratio = ...[2]

(c) Intensity I_4 is 0.33% of intensity I_1.

Determine the ratio $\frac{I_3}{I_2}$.

ratio = ...[2]

(d) The specific acoustic impedance of the muscle is greater than that of the fat.

State the effect, if any, on the value of the ratio $\frac{I_3}{I_2}$ of an increase in the difference between the specific acoustic impedance of the muscle and that of the fat.

.....

.....[1]

[Total: 8]

7 **(a)** Define *capacitance*.

.....

.....[1]

(b) Three capacitors of capacitances C_1, C_2 and C_3 are initially uncharged. They are then connected in series to a battery, as shown in Fig. 7.1.

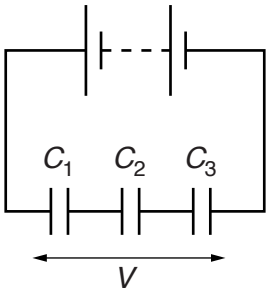

Fig. 7.1

The battery applies a potential difference V across the three capacitors.

Show that the combined capacitance C of the capacitors is given by

$$\frac{1}{C} = \frac{1}{C_1} + \frac{1}{C_2} + \frac{1}{C_3}.$$

[2]

(c) A battery of e.m.f. 12 V and negligible internal resistance is connected to a network of two capacitors and a resistor, as shown in Fig. 7.2.

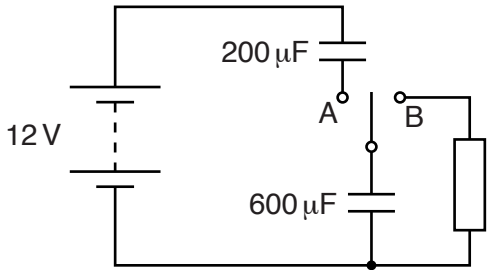

Fig. 7.2

The capacitors have capacitances of 200 μF and 600 μF. The switch has two positions, A and B.

(i) The switch is moved to position A.

Calculate

1. the combined capacitance of the two capacitors,

combined capacitance = ... μF [1]

2. the charge on the 600 μF capacitor,

charge = ... C [1]

3. the potential difference across the 600 μF capacitor.

potential difference = ... V [1]

(ii) The switch is now moved from position A to position B.

Calculate the potential difference across the 600 μF capacitor when it has discharged 50% of its initial energy.

potential difference = ... V [3]

[Total: 9]

8 **(a)** State two effects of negative feedback on the gain of an amplifier incorporating an operational amplifier (op-amp).

1. .....

.....

2. .....

.....

[2]

(b) An incomplete diagram of an amplifier circuit incorporating an ideal operational amplifier is shown in Fig. 8.1.

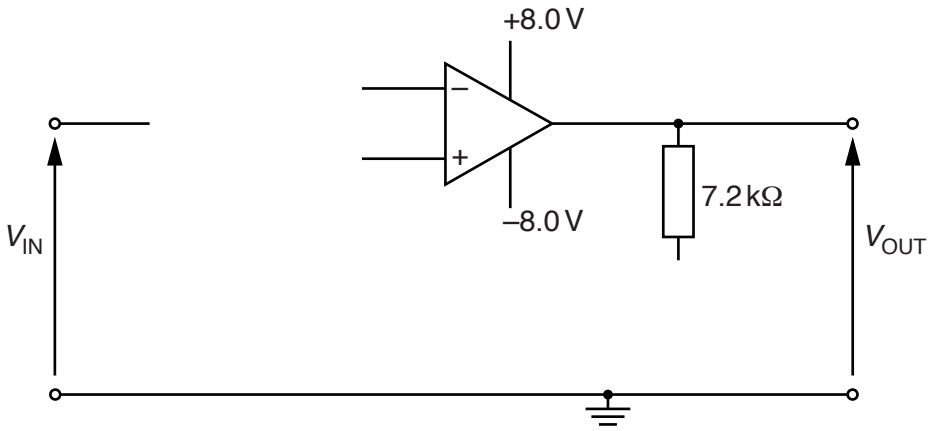

Fig. 8.1

The amplifier has a voltage gain of +5.0.

(i) Complete the circuit diagram of Fig. 8.1. [2]

(ii) Calculate the resistance of any additional resistor you have drawn on Fig. 8.1.

resistance = ... kΩ [2]

(iii) Fig. 8.2 shows the variation with time of the input potential V_{IN}.

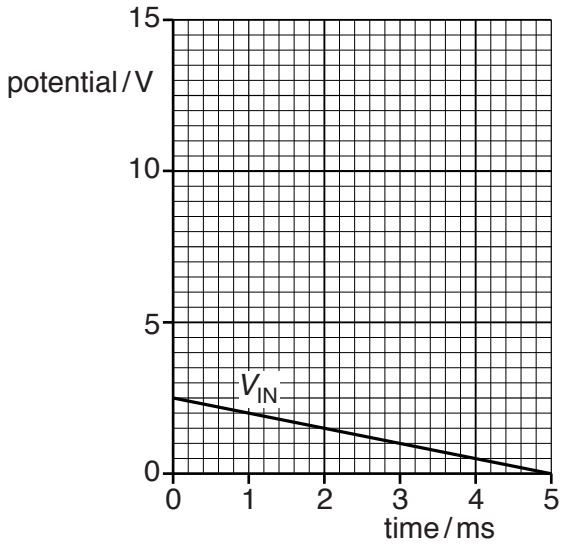

Fig. 8.2

On Fig. 8.2, draw the variation with time of the output potential V_{OUT}. [2]

[Total: 8]

9 A particle of charge $+q$ and mass m is travelling with a constant speed of $1.6 \times 10^5\,\text{m s}^{-1}$ in a vacuum. The particle enters a uniform magnetic field of flux density $9.7 \times 10^{-2}\,\text{T}$, as shown in Fig. 9.1.

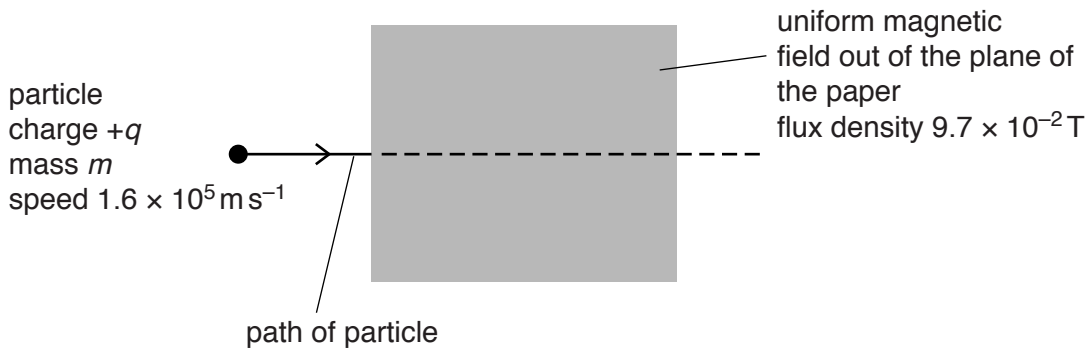

Fig. 9.1

The magnetic field direction is perpendicular to the initial velocity of the particle and perpendicular to, and out of, the plane of the paper.

A uniform electric field is applied in the same region as the magnetic field so that the particle passes undeviated through the fields.

(a) State and explain the direction of the electric field.

.....

.....

.....[2]

(b) Calculate the magnitude of the electric field strength.

Explain your working.

electric field strength = ... V m^{-1} [3]

© UCLES 2016

(c) The electric field is now removed so that the positively-charged particle follows a curved path in the magnetic field. This path is an arc of a circle of radius 4.0 cm.

Calculate, for the particle, the ratio $\frac{q}{m}$.

ratio = ...C kg^{-1} [3]

(d) The particle has a charge of $3e$ where e is the elementary charge.

(i) Use your answer in **(c)** to determine the mass, in u, of the particle.

mass = ...u [2]

(ii) The particle is the nucleus of an atom. State the number of protons and the number of neutrons in this nucleus.

number of protons = ...

number of neutrons = ...
[1]

[Total: 11]

10 A small coil of wire is situated in a non-uniform magnetic field, as shown in Fig. 10.1.

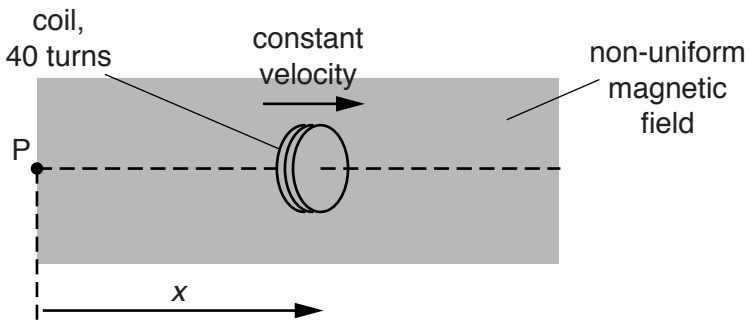

Fig. 10.1

The coil consists of 40 turns of wire and moves with a constant speed in a straight line. The coil has displacement x from a fixed point P.

The variation with x of the magnetic flux Φ in the coil is shown in Fig. 10.2.

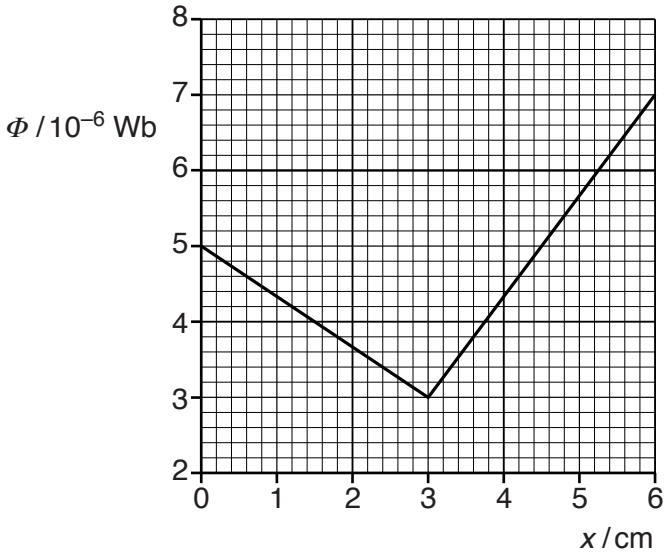

Fig. 10.2

(a) The coil is moved at constant speed between point P and the point where $x = 3.0\,\text{cm}$.

(i) Calculate the change in magnetic flux linkage of the coil.

change in flux linkage = ... Wb [1]

© UCLES 2016

(ii) The e.m.f. induced in the coil is 5.0×10^{-4} V. Determine the speed of the coil.

speed = ... $m\,s^{-1}$ [2]

(b) On Fig. 10.3, sketch the variation with x of the e.m.f. E induced in the coil for values of x from $x = 0$ to $x = 6.0$ cm.

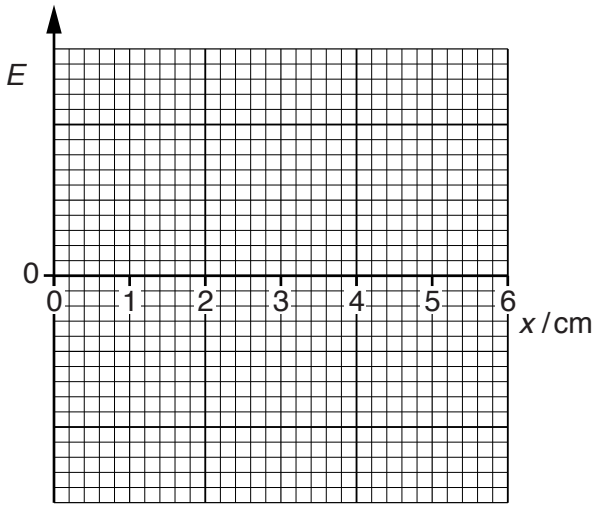

Fig. 10.3

[2]

[Total: 5]

11 (a) With reference to the photoelectric effect, state what is meant by the *threshold frequency*.

.....

.....

.....[2]

(b) Electromagnetic radiation of wavelength λ is incident on a metal surface. Electrons of maximum kinetic energy E_{MAX} are emitted.

(i) On Fig. 11.1, sketch the variation with $1/\lambda$ of E_{MAX}.

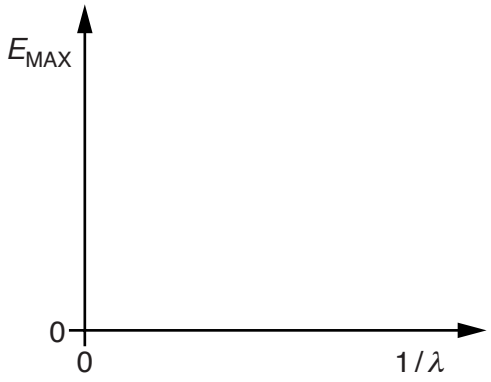

Fig. 11.1

[2]

(ii) State an equation relating the gradient of the graph drawn on Fig. 11.1 to the Planck constant h.
Explain any symbols you use.

.....

.....[1]

(iii) Explain why, for any particular wavelength of electromagnetic radiation, most of the electrons are emitted with kinetic energies less than the maximum value E_{MAX}.

.....

.....

.....

.....[2]

© UCLES 2016

(iv) Light of a particular wavelength is incident on a metal surface and gives rise to a photoelectric current.

The wavelength is reduced. The intensity of the light is kept constant.

State and explain the effect, if any, on the photoelectric current.

.....

.....

.....

.....

.....[3]

[Total: 10]

12 (a) In an X-ray tube, the hardness of an X-ray beam may be controlled.

(i) State what is meant by the *hardness* of the beam.

.....

.....[1]

(ii) State how the hardness of the beam may be decreased.

.....

.....[1]

(b) State one advantage and one disadvantage of producing a CT scan image of a person rather than a standard X-ray image.

advantage: .....

.....

disadvantage: .....

.....
[2]

[Total: 4]

13 Beryllium-7 ($^{7}_{4}$Be) is produced in the upper atmosphere and then sinks down onto the Earth's surface. Nuclei of beryllium-7 decay with a half-life of 53.3 days to form stable nuclei.

The activity of a sample of beryllium-7 on a tree leaf is 39 mBq.

(a) Show that the decay constant of beryllium-7 is $1.5 \times 10^{-7}\,s^{-1}$.

[1]

(b) Determine the mass of the beryllium-7 on the leaf.

mass = ... kg [3]

(c) The leaf is covered so that no further beryllium-7 is added to the existing sample from the atmosphere.

Calculate the time that must elapse before the activity of the sample is reduced to 2.0 mBq.

time = ... s [2]

[Total: 6]

Permission to reproduce items where third-party owned material protected by copyright is included has been sought and cleared where possible. Every reasonable effort has been made by the publisher (UCLES) to trace copyright holders, but if any items requiring clearance have unwittingly been included, the publisher will be pleased to make amends at the earliest possible opportunity.

To avoid the issue of disclosure of answer-related information to candidates, all copyright acknowledgements are reproduced online in the Cambridge International Examinations Copyright Acknowledgements Booklet. This is produced for each series of examinations and is freely available to download at www.cie.org.uk after the live examination series.

Cambridge International Examinations is part of the Cambridge Assessment Group. Cambridge Assessment is the brand name of University of Cambridge Local Examinations Syndicate (UCLES), which is itself a department of the University of Cambridge.